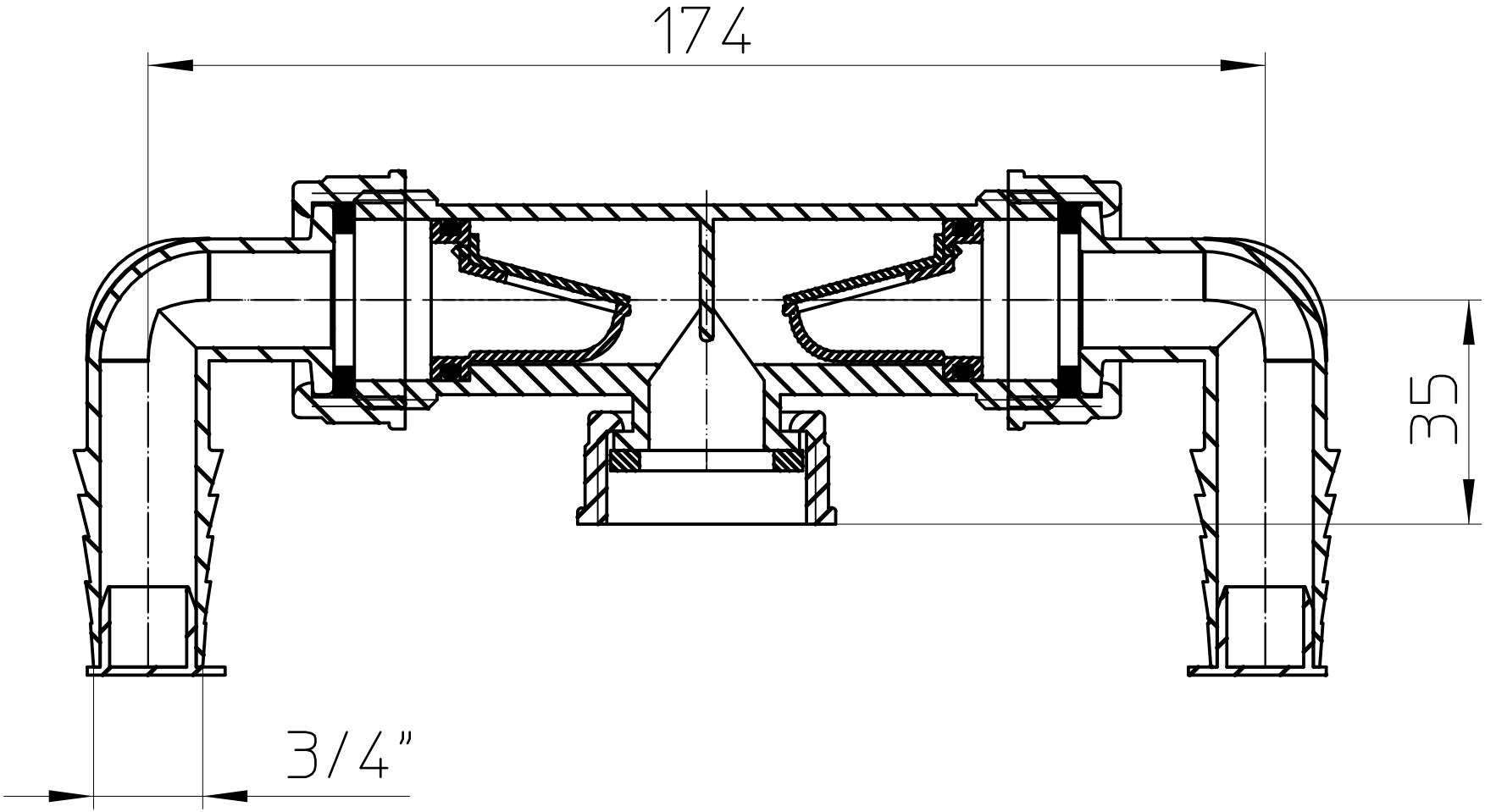
174
35
3/4"