Villeroy & Boch
1748
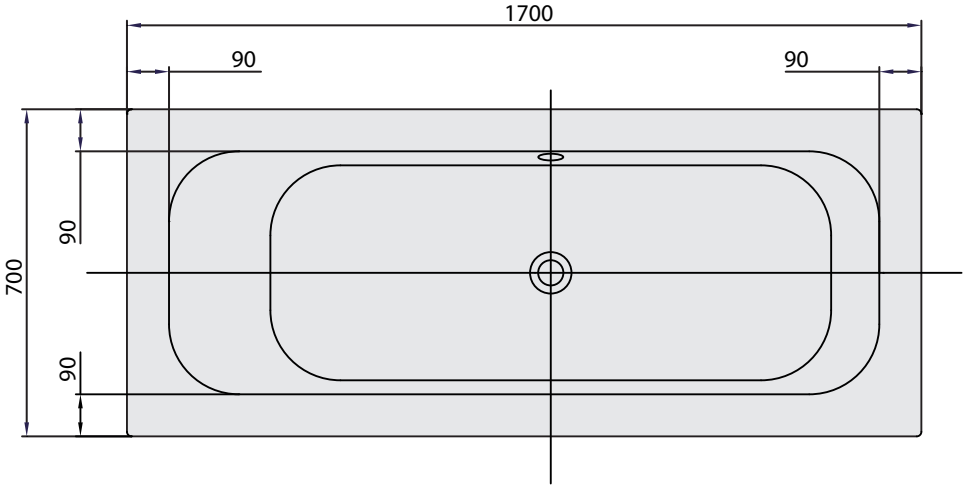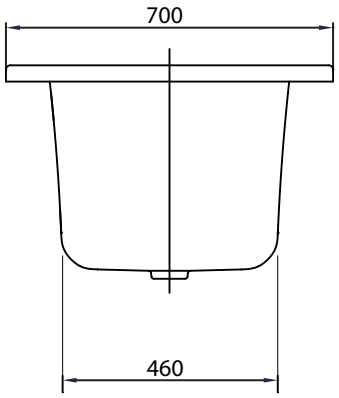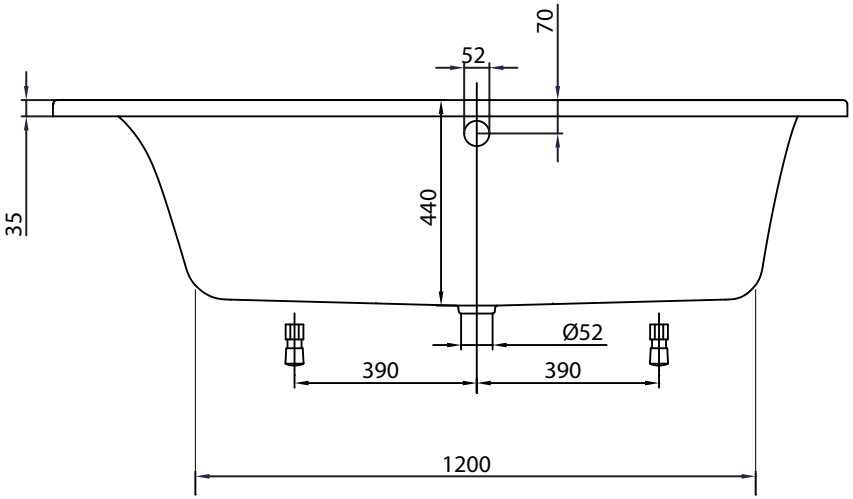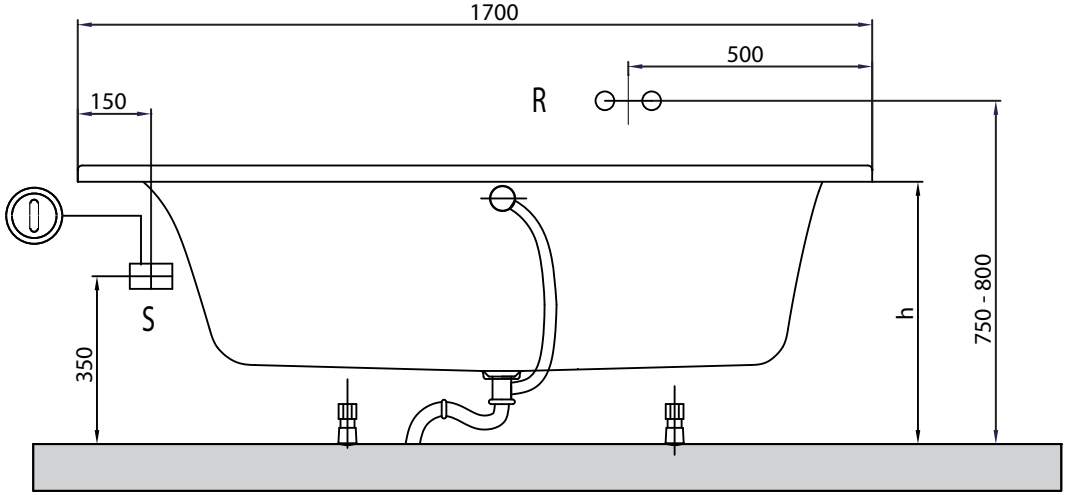
- This drawing is for information only.
- Dimensions on the actual product can deviate from this drawing.
- Claims about wrong dimensions on product or drawings will not be accepted.