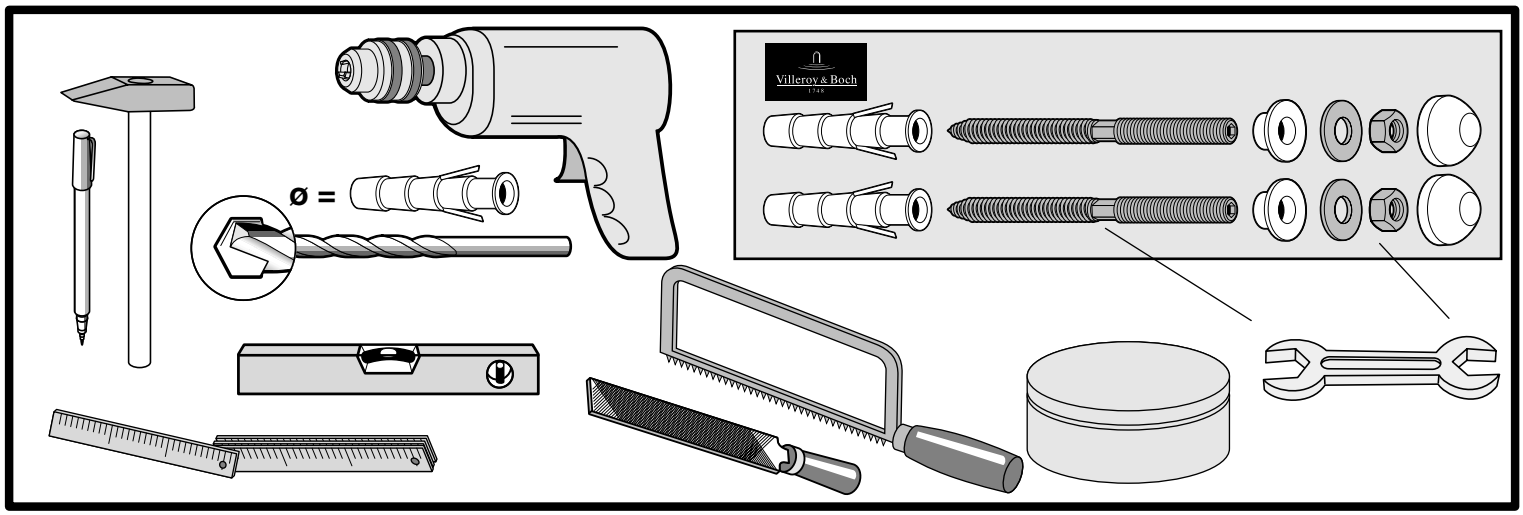
Villeroy & Boch
1748
Ø =

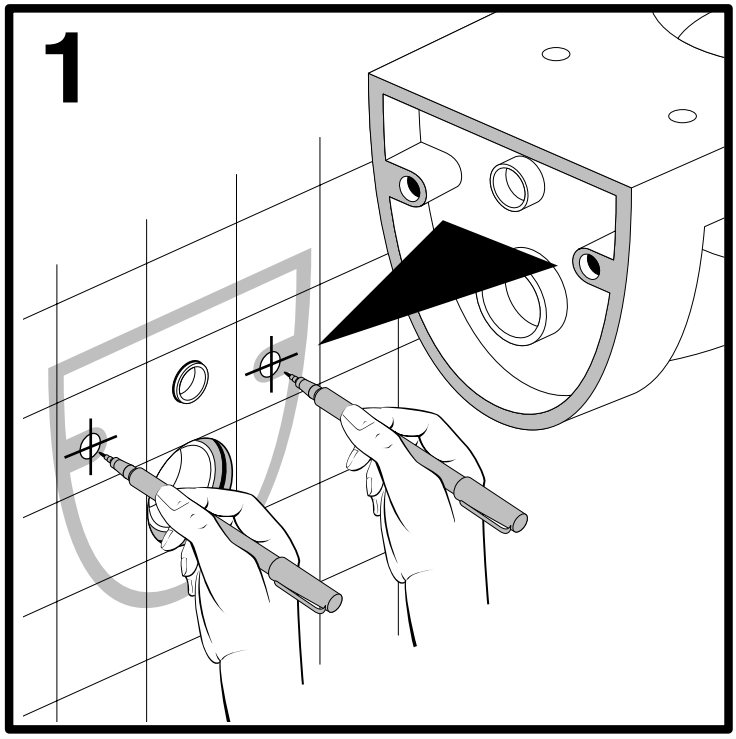
1

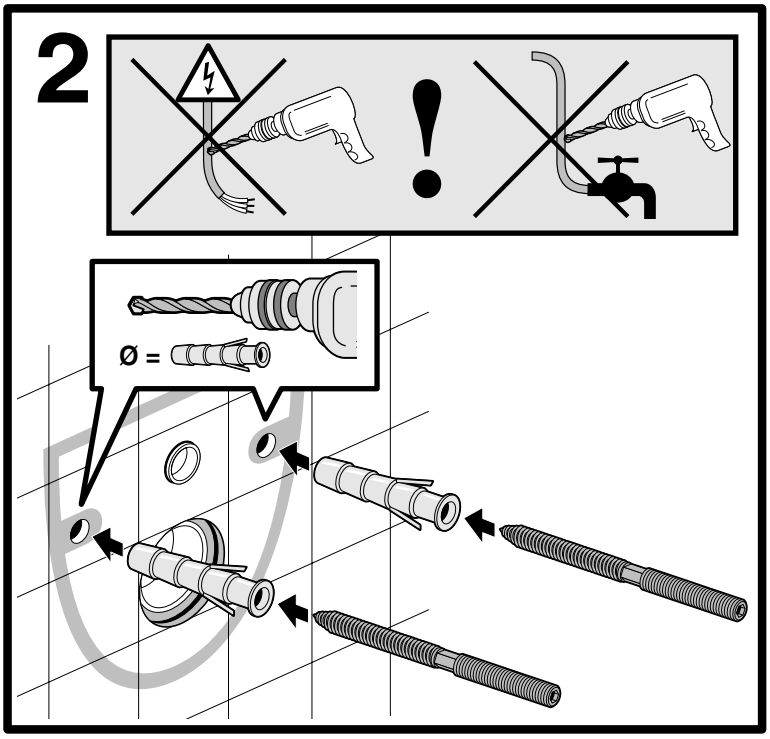
2
!
Ø =

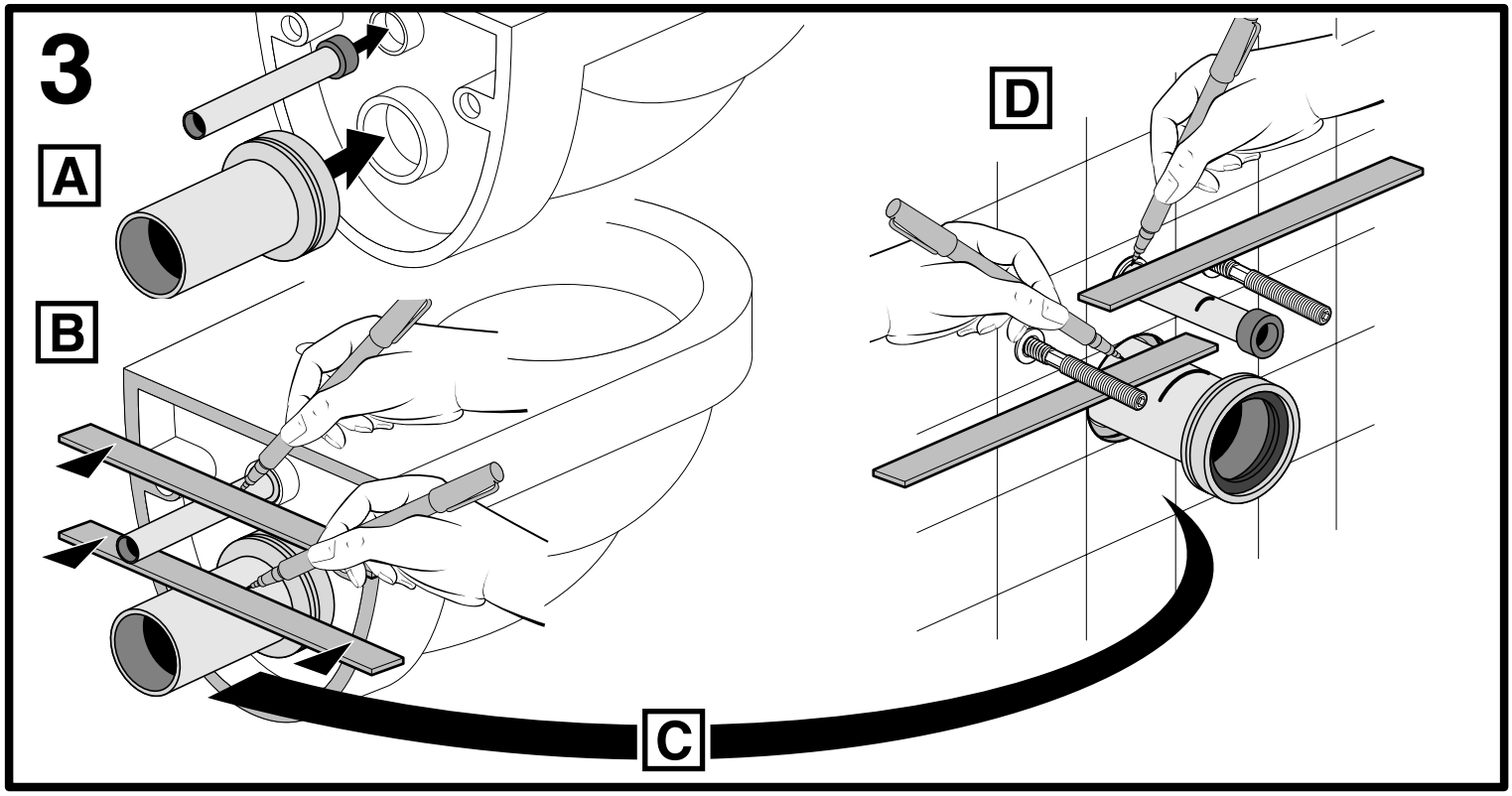
3
A
B
C
D

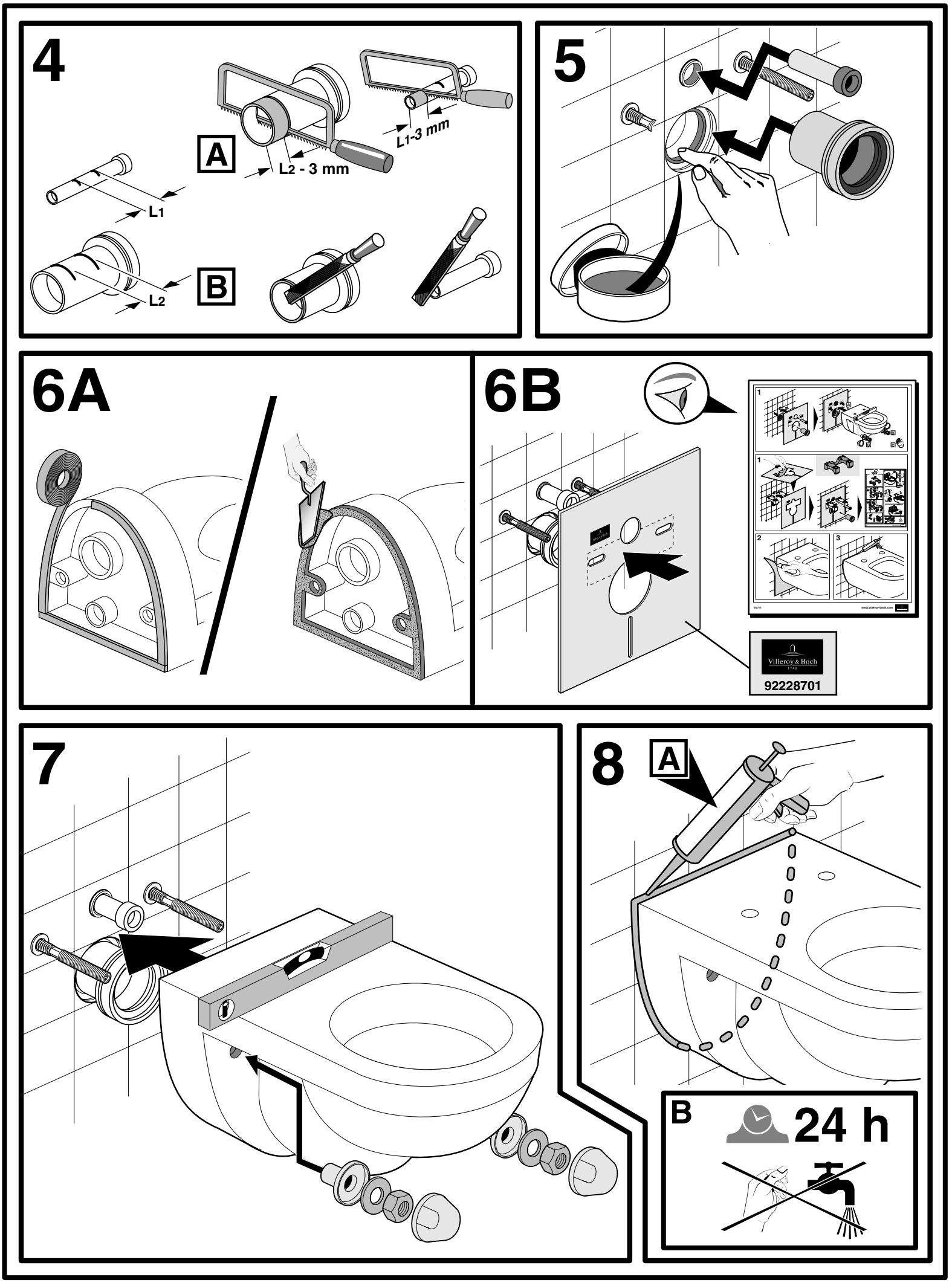
4
A
L1-3 mm
L2 - 3 mm
L1
L2
B
5
6A
6B
92228701
7
8
A
B
24 h