AP116PLUS

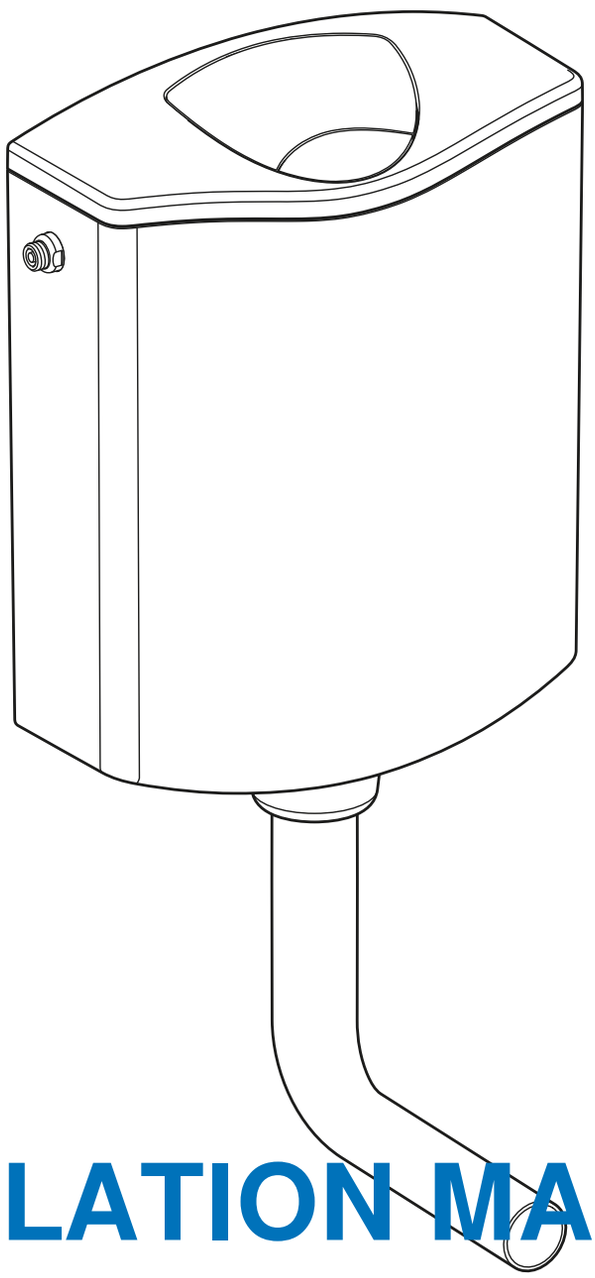

INSTALLATION MANUAL

MONTAGEANLEITUNG
INSTRUCTIONS DE MONTAGE
ISTRUZIONI PER IL MONTAGGIO

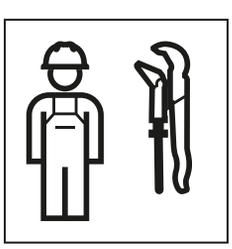

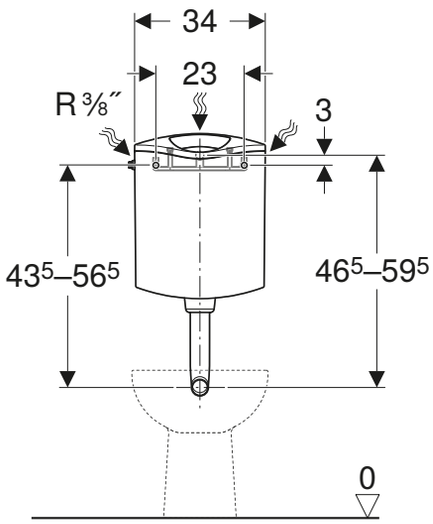

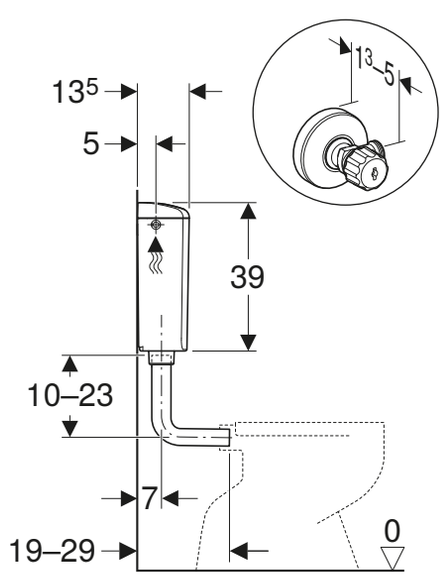

1

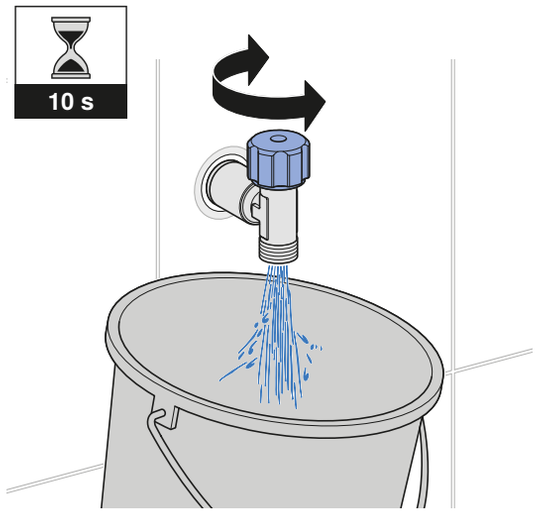

4901515147 © 06-2018
968.262.00.0(00)

2

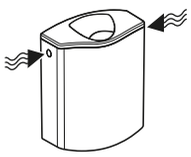

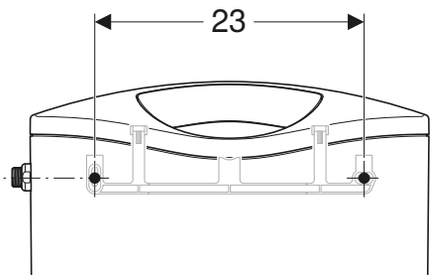

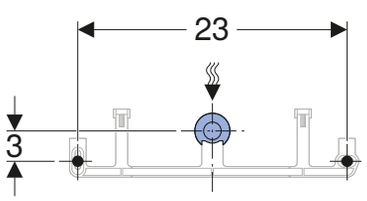

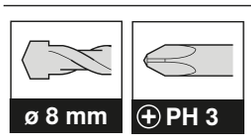

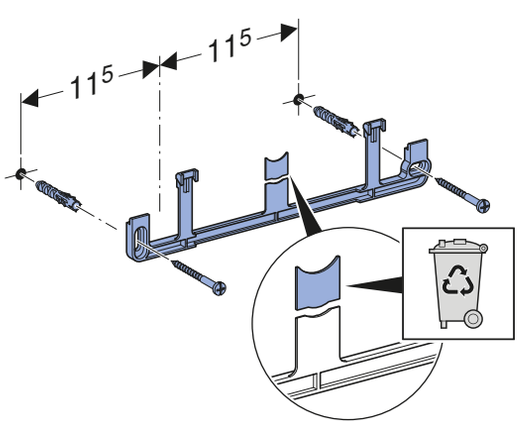

3

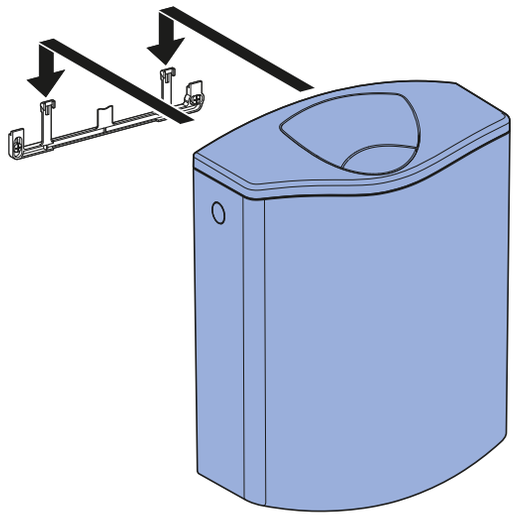

4

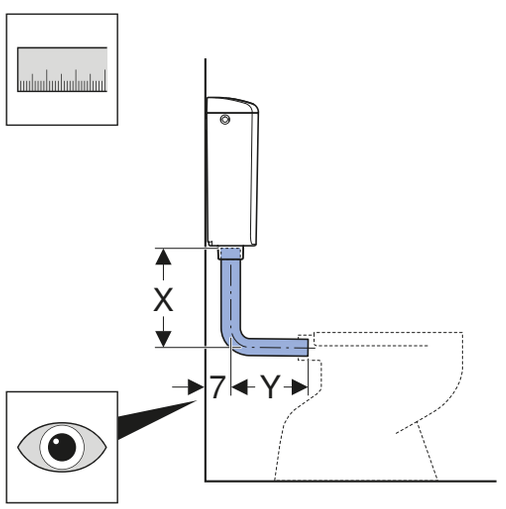

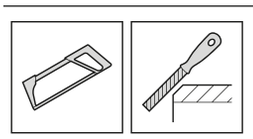

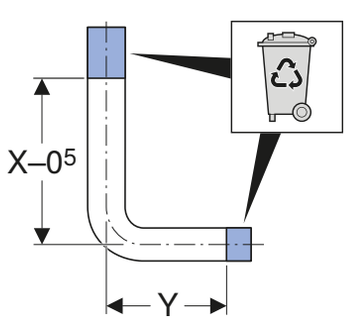

5

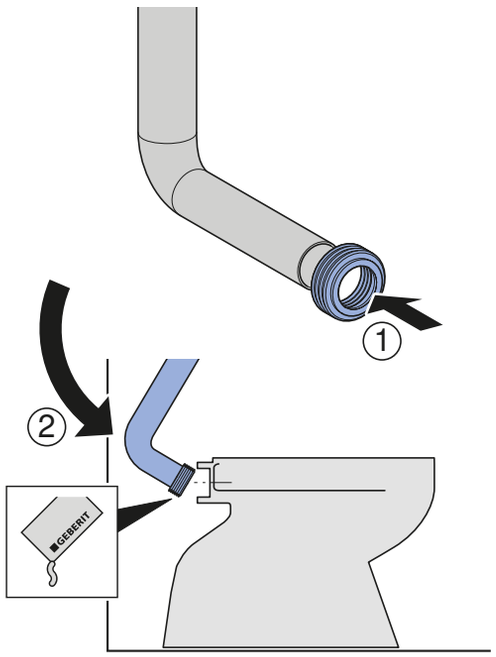

6

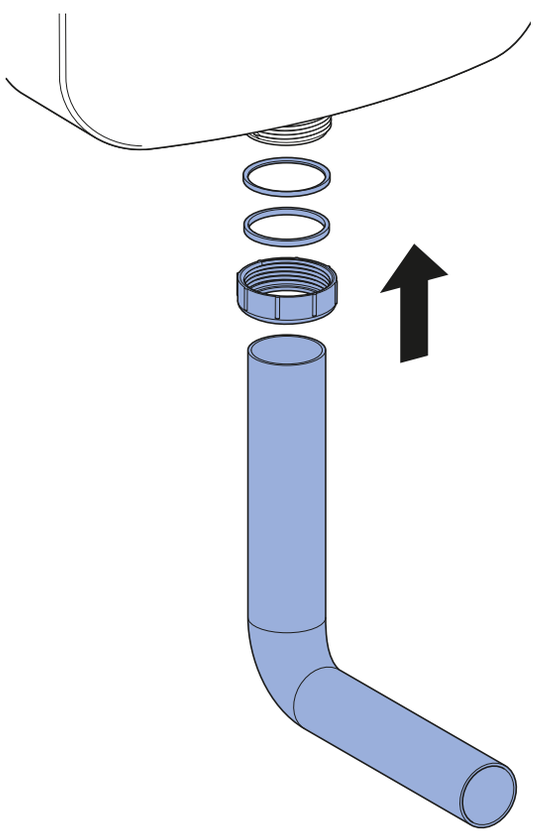

7

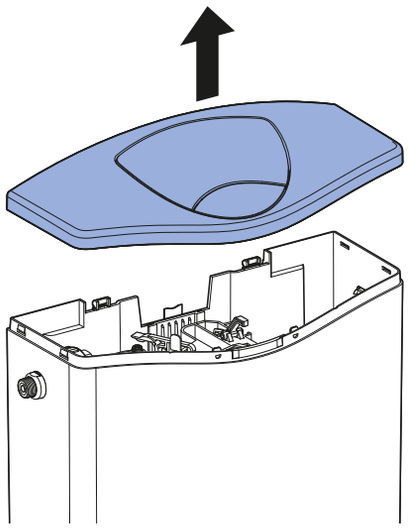

4901515147 © 06-2018
968.262.00.0(00)

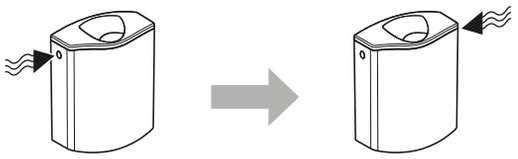

①

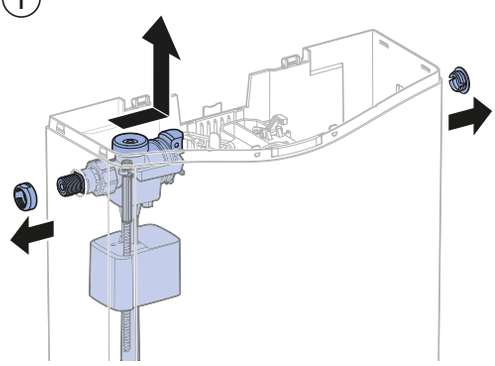

②

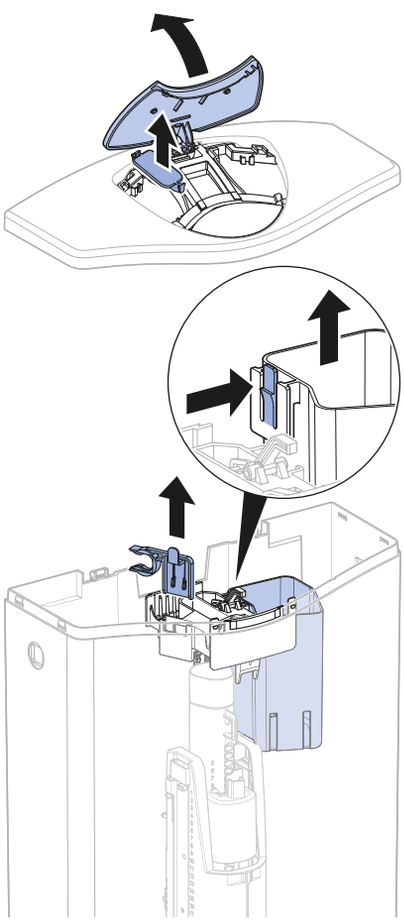

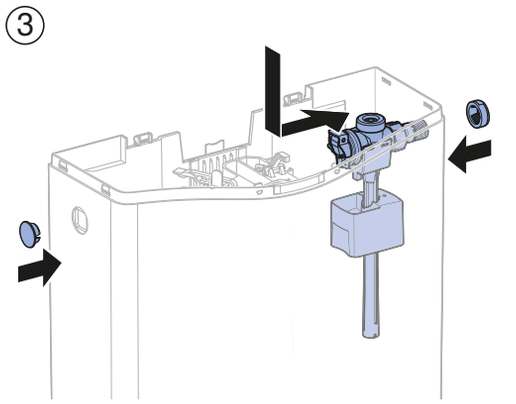

③

④

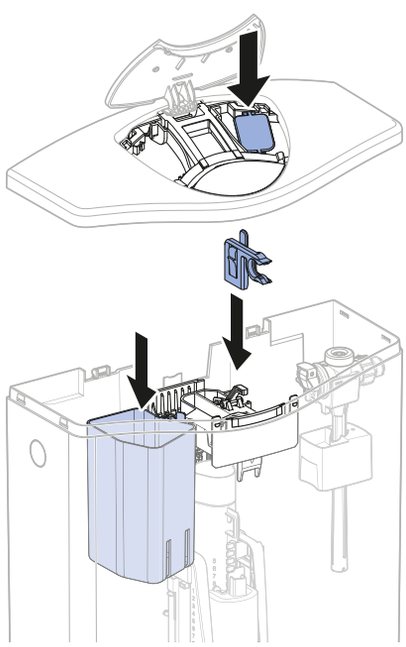

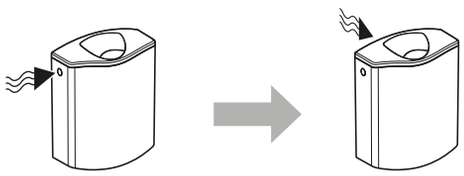

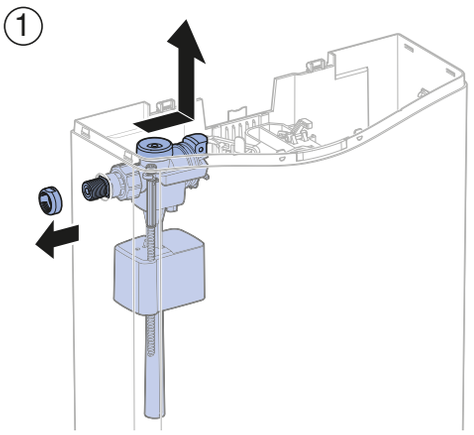

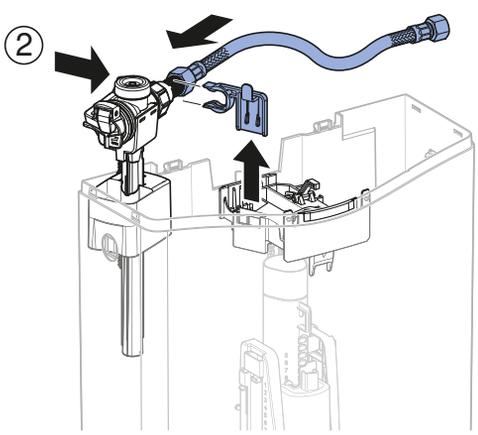

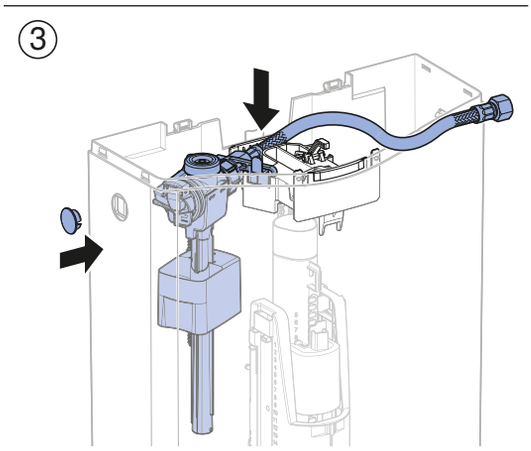

8

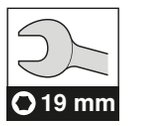

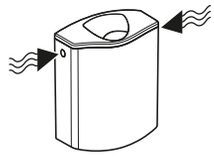

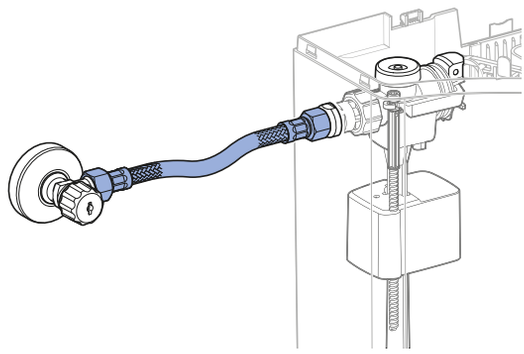

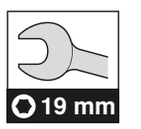

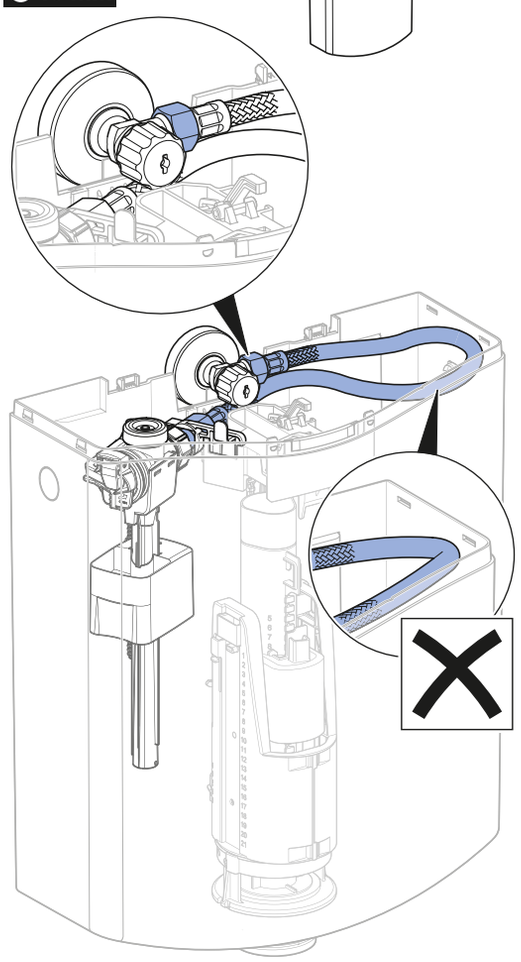

4901515147 © 06-2018
968.262.00.0(00)

9

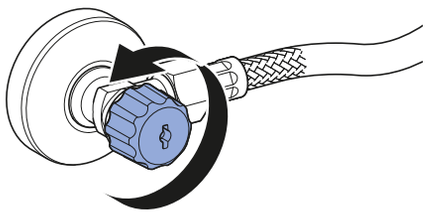

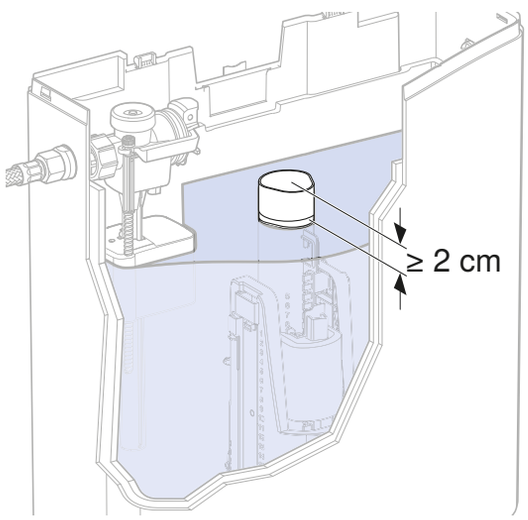

10

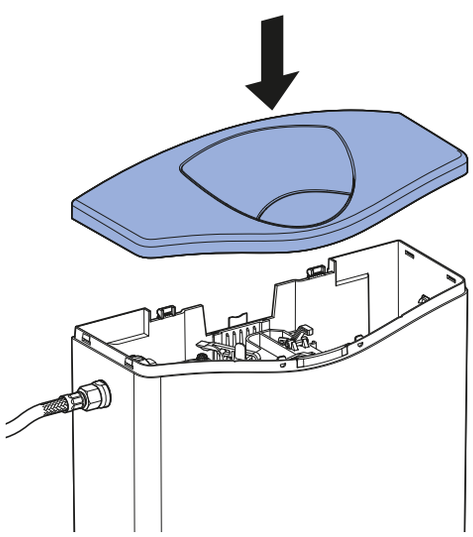

1

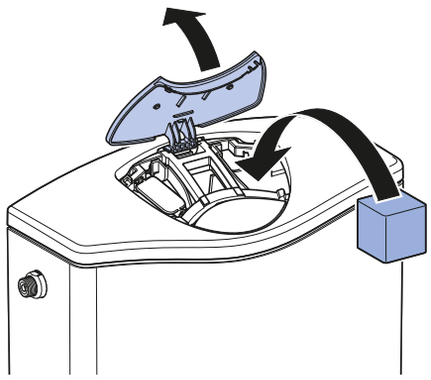

2

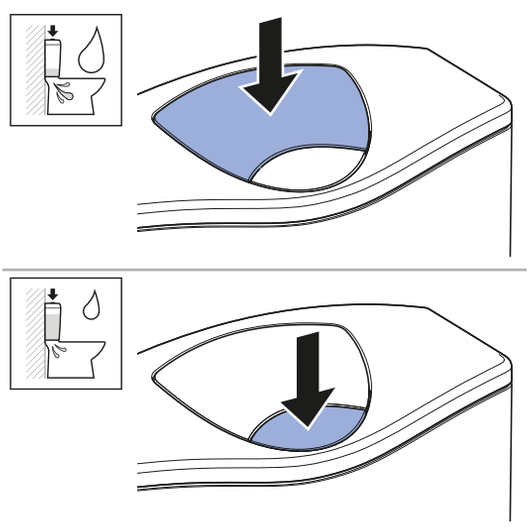

Geberit International AG
Schachenstrasse 77, CH-8645 Jona
documentation@geberit.com
www.geberit.com

4901515147 © 06-2018
968.262.00.0(00)